| TABULATION | | | | | | | |
|---|---|---|---|---|---|---|---|
| PART NO. | CORE | DIM "A" | DIM "B" | DIM "C" | DIM "D" | C OF G | WEIGHT(Kg) |
| A077E015 | F | 580.5 | 488.5 | 287.8 | 241 | 229 | 112 |
| A077E016 | G | 580.5 | 488.5 | 287.8 | 241 | 228 | 118 |
| A077E019 | K | 600.5 | 508.5 | 307.8 | 261 | 239 | 124 |
| A077G140 | M | 615.5 | 523.5 | 322.8 | 276 | 246 | 135 |
| A077G403 | P | 635.5 | 543.5 | 342.8 | 296 | 256 | 144 |
| A077F202 | U | 665.5 | 573.5 | 372.8 | 326 | 271 | 152 |

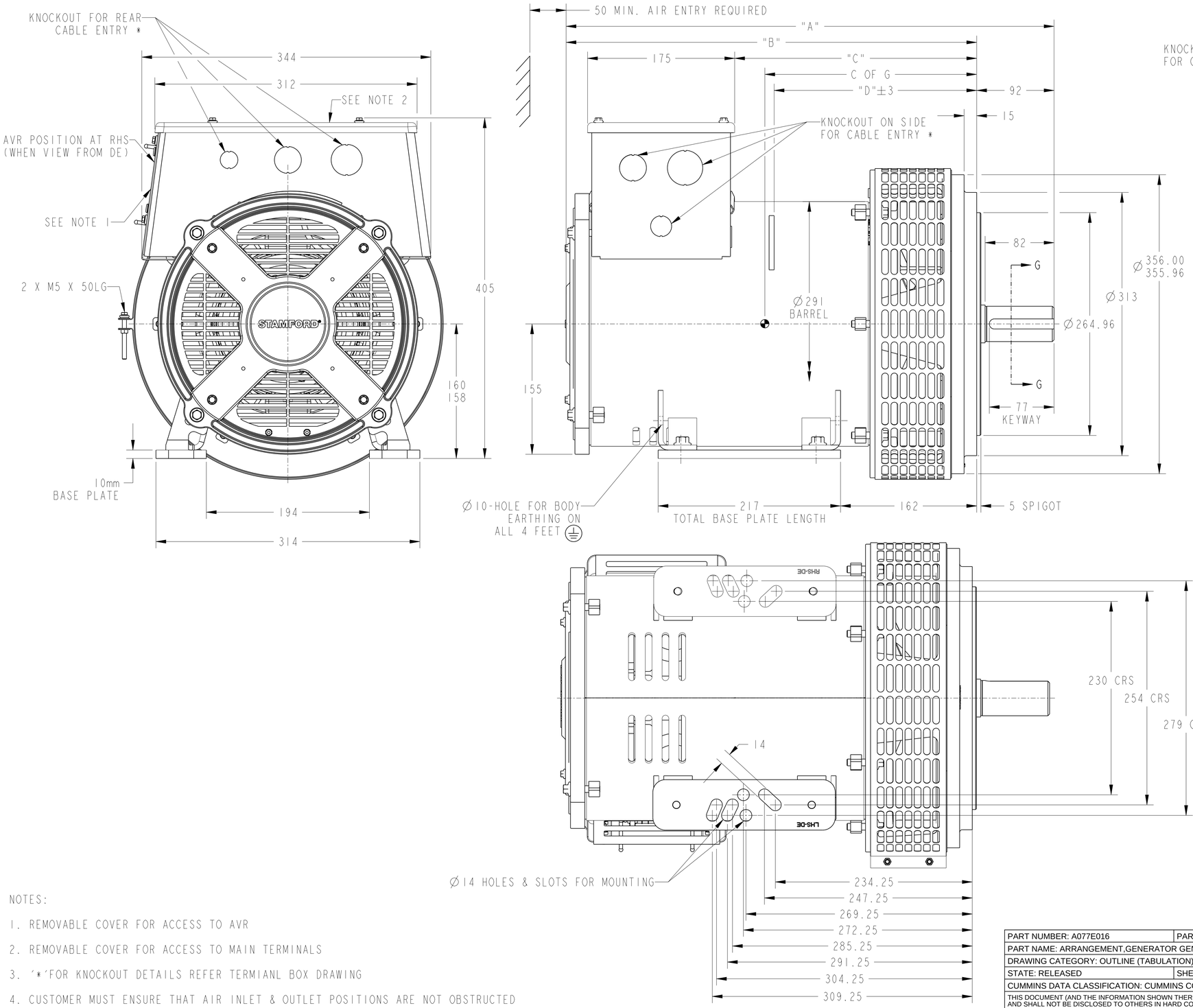


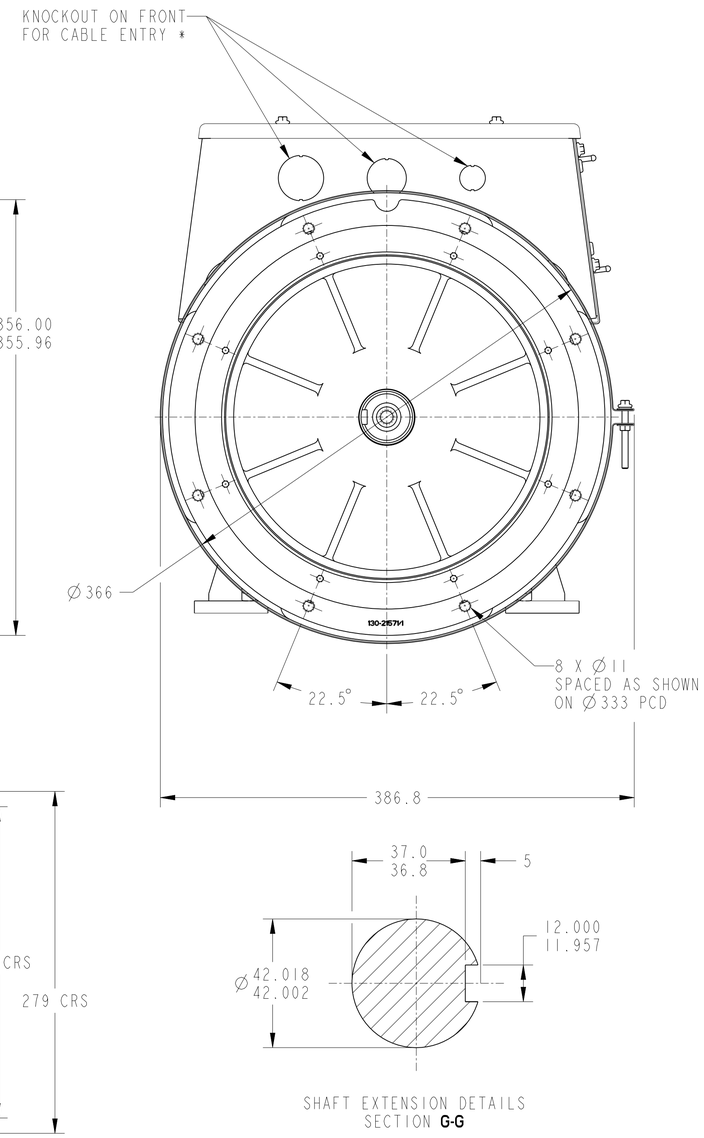


SHAFT EXTENSION DETAILS
SECTION **G-G**

NOTES:

1. REMOVABLE COVER FOR ACCESS TO AVR
2. REMOVABLE COVER FOR ACCESS TO MAIN TERMINALS
3. '*'FOR KNOCKOUT DETAILS REFER TERMIANL BOX DRAWING
4. CUSTOMER MUST ENSURE THAT AIR INLET & OUTLET POSITIONS ARE NOT OBSTRUCTED

DRAWING SPECIFICATION DESCRIPTION
SOL2,2B,4P,NO ADAPTER

| | |
|---|---|
| PART NUMBER: A077E016 | PART REVISION: C |
| PART NAME: ARRANGEMENT,GENERATOR GENERAL | |
| DRAWING CATEGORY: OUTLINE (TABULATION) | |
| STATE: RELEASED | SHEET: 1 OF 2 |
| CUMMINS DATA CLASSIFICATION: CUMMINS CONFIDENTIAL | |

THIS DOCUMENT (AND THE INFORMATION SHOWN THEREON) IS CONFIDENTIAL AND PROPRIETARY AND SHALL NOT BE DISCLOSED TO OTHERS IN HARD COPY OR ELECTRONIC FORM, REPRODUCED BY ANY MEANS, OR USED FOR ANY PURPOSE WITHOUT WRITTEN CONSENT OF CUMMINS INC.

Cummins Generator Technologies

DIMENSIONS ARE IN: MILLIMETERS
[ ] ARE IN: -
SIZE: A1 SCALE:1:3
DIMENSIONING AND TOLERANCING PER: ASME Y14.5-2009
THIRD ANGLE PROJECTION
CAD SYSTEM PTC® Creo® Parametric

## Part Number: A077E016

| | | | |
|---|---|---|---|
| Change Notice | CN00204734 | Alternates | |
| Manufacturer Part (MEP) | No | Usage | Production Only |
| Release Phase Code | Production (P) | Drawing Specification | Number: DS47162913 |
| External Regulations | No External Regulation | | Revision: C |

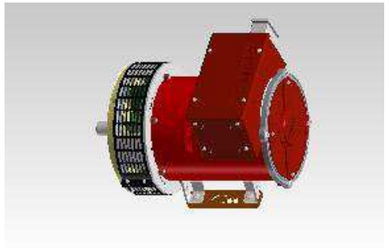

3D image provided when available for visual reference only.

### Drawing Revision Information

**Description of Change(s)**
Note: Change information is provided for reference only and does not supersede the drawing's primary content.

1. MINOR AMENDMENT

ADMINISTRATIVE CHANGE(S) TO PART ATTRIBUTES, BILL OF MATERIAL, OR ASSOCIATED SPECIFICATIONS.

### Drawing Authorization

| | | | |
|---|---|---|---|
| Drafter | Tilak S Jain | Date | 29OCT2025 |
| Checker | Kuldeep D Pawar | Date | 30OCT2025 |
| Approver | NO APPROVAL REQUIRED | Date | |

Document Generated: **30OCT2025 04:33 GMT**

Cummins Data Classification:
**Cummins Confidential**

This document (and the information shown thereon) is **Confidential and Proprietary** and shall not be disclosed to others in hard copy or electronic form, reproduced by any means, or used for any purpose without written consent of Cummins Inc.